Longitudinal Sheath Current Revisited

I wrote my first industry article on this subject (I believe in CED) in 1989 after conducting research with electric utilities and in taking measurements in operational cable systems. Some recent questions from an industry colleague convinced me it was time to readdress this subject, as I suspect many technicians are either unaware of it, or don't fully understand the mechanism which creates it and its impact on outside plant.

Summary of Issues

Longitudinal sheath current (LSC) describes the condition in an outside cable television plant where AC currents are flowing on the coaxial cable *sheath* that are created by load imbalance currents external to the self-regulating cable plant powering system. Any load *imbalance* in the electric utility primary and/or secondary system(s) creates current flow in their neutral system. Our outside plant carries a portion of these currents because of our *shared path* with the electric utility grounded-neutral system. Because the cable plant bonds to their grounded-neutral system, our sheath (and strand to a lesser degree) carries a portion of this current to the extent of the *ratio of the overall impedance of our plant to theirs*. This conduction of neutral current on the sheath induces longitudinal voltages into the coaxial system center conductor.

The purpose of this summary is to provide a foundation for a better understanding of these issues, along with recommended remedial action when required.

Creation of Longitudinal Sheath Currents

Cable systems are required to bond to the electric utility grounded-neutral conductor system according to National Electrical Safety Code (NESC) requirements, along with local codes if applicable, which describe recommended safety and construction practices for the outside plant. The NESC is published by and available through the Institute of Electrical and Electronics Engineers (IEEE.org). Bonding requirements to the utility pole vertical ground are typically 4 per mile, along with the end point(s) of each support strand run. These requirements are designed to ensure the safety of utility workers along with the general public. One effect of this bonding is that, because we construct a *metallic conducting plant* parallel to their neutral system, we share a portion of their load imbalance currents, steady state & transient.

In reality there are two types of current-induced voltages that impact the outside cable plant. The first is the more familiar rapid rise-time voltage transient and current. It is typically large in magnitude and short in duration; generally less than one second. These short-duration surge currents/voltages are caused by nearby lightning strikes, residential load switching, and other electric utility phenomena such as arcing or line faults.

The second type, and of specific concern in this report, is the long-duration LSC caused by load imbalance currents flowing in the neutral system. These are generally lower in magnitude but longer in duration, often for minutes or even hours. These neutral currents are usually caused by unbalanced loading in local sections of the three-phase power system, in single-phase 100 ampere spurs and branch circuits, and by the improper balancing of single-phase 220 volt distribution transformer circuits.

A portion of these neutral currents flow through the cable system coaxial sheath(s) if the system is properly bonded. And current flowing through the sheath will cause a subsequent longitudinal voltage drop, which in turn couples to the electrostatic and magnetic fields within the cable. Longitudinal sheath currents therefore create longitudinal voltage drops, which induce voltages onto the center conductor across the coaxial system. The interaction of these induced waveforms with those of the cable television quasi-square wave power supply are complex, with vector-value peak voltages occasionally quite high. Vector voltage addition (or subtraction) at a given time and plant location is complex and difficult to fully quantify.

The magnitude of the voltage induced from this current flow is dependent on the:

- Plant bonding practices.
- Magnitude of the imbalance current shared by and carried on the sheath.

- Coaxial cable *properties* including inductance, capacitance, and conductance.

See Figure 1.

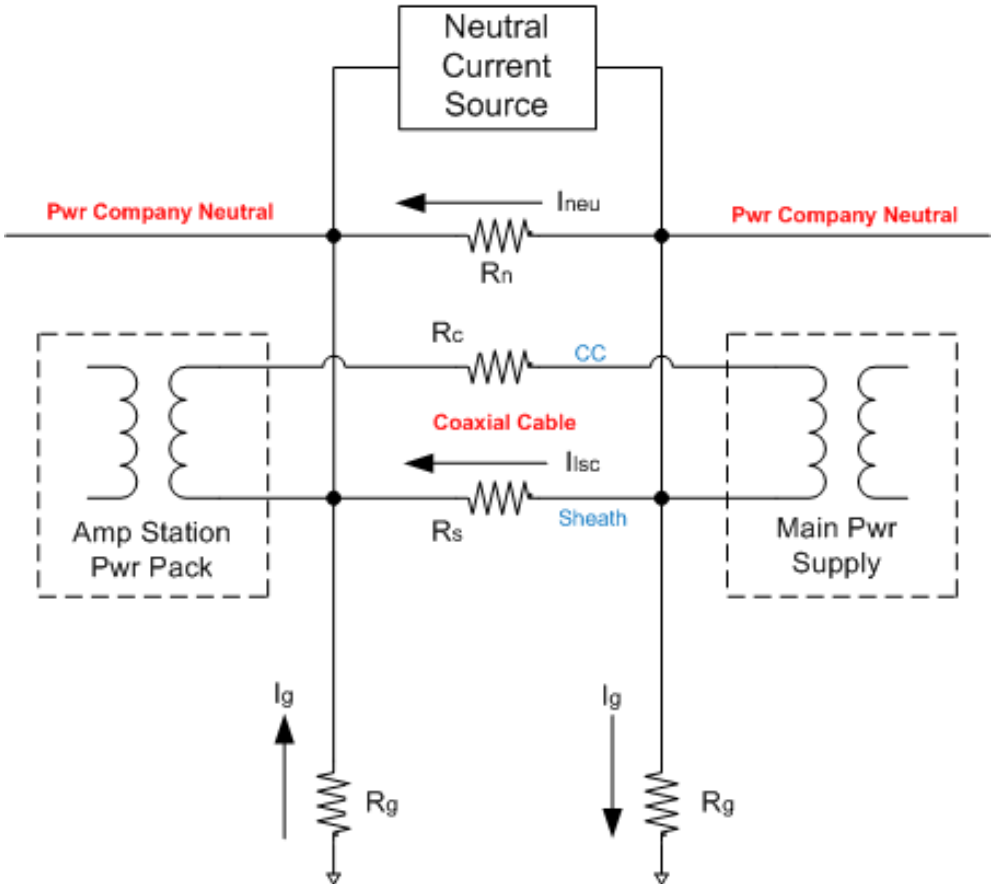

Figure 1 Basic LSC Mechanism

Any neutral current source will cause some current to flow in the cable sheath when bonding is in place. Total neutral current is a summation of neutral conductor current (I_{neu}), cable sheath current (I_{lsc}), and ground system current (I_g). I_{lsc} induces voltages in the effected cable spans, and the worst-case assumption for this analysis is that it is *additive* (or subtractive) in both amplitude and phase (vector addition) to the output of the cable system constant voltage transformer. This will cause the amplifier station voltage to be higher (or lower) than expected. LSC current(s) vary with fluctuations in electric utility loads. The voltages induced by LSCs are by an entirely different mechanism than the AC powering voltage present, therefore the higher the system supply voltage the less percent voltage change at a problem location. See Figure 2 for further detail.

Electric utilities are *generally* not overly concerned with high neutral currents lasting several seconds, and some consider any neutral current level *acceptable* if it is self correcting. Total neutral currents from 100 to 300 amperes are not uncommon. Measurements on the *percentage* of current carried by each conductor (neutral conductor, cable sheath, and ground path) performed in the 1980's by a major MSO in cooperation with Cable Television Laboratories demonstrated that the percentage of these neutral currents carried by the cable system sheath were between 20% and 50%! The percentage carried by the cable plant was dependant on parameters such as the number of grounds per mile and their impedance, the size of the neutral conductor, and size and number of cable television coaxial cables (combined sheath resistance). The issue of strand current carriage is ignored in this analysis as it has historically been determined to be low. Modeling calculations on additive (in-phase) induced voltages from LSCs are shown in Figure 2. Basic model assumptions are 2000 feet of cable

between (line extender) amplifiers, a single .750" cable, switch-mode power packs in all amplifiers, and all complex LSC induced voltages add in-phase. Amps 1, 2 and 3 are in single cascade from the main AC power supply.

Calculated LSC Voltages in Amplifier Cascade						
For calculation modeling assumptions, see below						
Power Supply V	**60**	**60**	**60**	**90**	**90**	**90**
Amplifier #1 power draw - watts	35	35	35	35	35	35
Amplifier #2 power draw - watts	35	35	35	35	35	35
Amplifier #3 power draw - watts	35	35	35	35	35	35
Sheath Resistance - ohms (2,000 ft)	0.34	0.34	0.34	0.34	0.34	0.34
Center Conductor (CC) Resistance - ohms (2,000 ft)	1.16	1.16	1.16	1.16	1.16	1.16
LSC in amperes (20% of total neutral current)	**10**	**30**	**60**	**10**	**30**	**60**
1st Amplifier - expected voltage	57.1	57.1	57.1	88.1	88.1	88.1
1st Amplifier - total voltage with in-phase LSC	60.5	67.3	77.5	91.5	98.3	108.5
2nd Amplifier - expected voltage	55.1	55.1	55.1	86.9	86.9	86.9
2nd Amplifier - total voltage with in-phase LSC	61.9	75.5	95.9	93.7	107.3	127.7
3rd Amplifier - expected voltage	54.1	54.1	54.1	86.3	86.3	86.3
3rd Amplifier - total voltage with in-phase LSC	64.3	84.7	115.3	96.5	116.9	147.5
% voltage increase at amp #3 only - projected vs calculated	**19%**	**57%**	**113%**	**12%**	**35%**	**71%**
Assumptions: 2,000 ft of .750" single cable between amps (plus amp at PS), loop resistance is from cable spec book, all power packs are switch-mode, LE amplifier load is 35 watts each, and all LSC induced complex voltages combine 'in-phase' (worst case). Expected voltage at each location is calculated based on total loop resistance, however LSC calculations are based on sheath resistance only. Expected amplifier voltages are calculated using an iterative powering routine for switch-mode power packs. Actual DC resistance for .750" P3 cable is .17 ohms/1,000' sheath & .58 ohms/1,000' CC.						

Figure 2 – LSC Model Calculations

As can be seen in Figure 2, even small values of LSC can create an *increasing voltage condition* when conditions are phase-additive. Under high LSC conditions, additive voltages could easily fire a transient protective device such as an AC crowbar.

Technically, cable television plant grounding does not create LSCs, but rather the bonding process alone. See my anecdote at the conclusion of this article. However, additional grounds placed by the cable operator may, in some instances, increase LSC currents. Therefore, the placement of extra grounds beyond the required bonding process should be performed judiciously.

Effects of Longitudinal Sheath Currents in the Cable Plant

The following general problems are experienced in the cable television plant when LSCs are present.

- Sheath currents may cause electrolysis and rectification in cable plants where dissimilar metal contacts exist. Beyond outside plant physical degradation, LSCs can create unusual plant problems that manifest as both RF and AC symptoms.
- Long-term power pack failures are experienced from excessive over-voltage conditions at switch-mode regulator circuitry. More specifically:
    - Power packs furthest from the main AC supply usually experience the greatest impact. Induced voltages from LSCs are often additive and increase as one moves further from the AC supply. See the bottom portion of Figure 2.
    - If LSC induced voltages combine phase-opposite to the voltage from the main AC supply, it can result in a reduction in the expected voltage at an amplifier station. A power pack with voltage significantly reduced may drop out of regulation producing hum, excessive noise, and non-linear distortions.

- Burned circuit board traces and damage to other components may result when protective devices fire in the presence of excessive LSCs.

Recommended Solutions

- Inadequate ground system current (I_g) because of poor electric utility grounding practices escalate LSCs. Referring to Figure 1, it can be seen that as the total combined value of Rg increases, the percentage current carried by the other two paths will increase. It therefore behooves the operator to work with the electric utility to achieve better grounding in problematic LSC plant locations. When improved (increased) ground conduction cannot be achieved in working with the utility, the operator can place (under certain restrictions) additional grounds in the cable plant, which then must be bonded to the electric utility vertical ground. Also remember that most codes prohibit the placement of two ground verticals on the same utility pole, so you can't choose just any location to place an additional ground.
- Utilize equipment that has rugged power traces and other components needed to withstand excessive LSC conditions.
- Utilize AC crowbar surge protection devices in areas and equipment where LSCs (or any other current or voltage surge conditions) are a recurring problem. When an AC crowbar fires (and resets at each zero voltage crossover point i.e., every half AC cycle) it shorts LSC induced voltage(s) from center conductor to sheath (& ground) before damage occurs. Amplifier traces and other components such as passives must be ruggedized to survive the currents that flow.
- Convert 60 VAC systems to 90 VAC. Both the calculations included in this report (Figure 2), and past experience in 60 VAC systems (and 30 VAC powering before that) provide ample evidence that the effects of LSC induced voltages are less significant as supply voltages increase.
- LSC problems in jacketed aerial or underground plant present different challenges and are not considered in this article. Bonding and grounding policies may have to be modified when LSC conditions exist in this environment.

Conclusion

I'd like to conclude this article with a personal anecdote. I began my career in cable television in the spring of 1973. In 1979 I was promoted to the position of *state engineer* for the cable television MSO that I worked for. I had already worked in many of the systems operated by this MSO but not all of them.

One of my first calls in the ensuing months was from a system that I had visited several times, but where my experience was confined to the headend facility and not the outside plant. The chief tech of this system contacted me and requested assistance with an ongoing problem that he stated had existed as long as he had been there. The problem appeared as low-level visual interference in the lower frequency analog channels; primarily in channels 2 through 6 but sometimes extending up through the mid-band and high-band channels.

Upon arrival, we verified with a spectrum analyzer that there was no interference in the headend. We then moved to 3rd trunk station in cascade from the headend. This was before the introduction fiber optics into the the cable plant, and long cascades of trunk stations were 'the norm'. When I chose the 3rd trunk in cascade, I did so deliberated as I considered this location to still be relatively close to the front end of the network.

I stayed on the ground as my analyzer needed AC for powering, and had the tech take a long lead up the pole to connect my Tek 7L12 analyzer to the input-output test points off the trunk station. What I saw on my analyzer astounded me! Below the analog Ch02 signal was very high level RF interference comprised of hundreds of individual carriers of varying amplitude. This was before the deployment of return traffic in this system. No diplex filters were installed; I was measuring hundreds of carriers running approximately 30 dB or higher than normal downstream traffic at frequencies below 50 MHz, and with lower RF level carriers evident in the spectrum between 50 MHz and several hundred MHz. And all of this at a point approximately one mile from the headend where the RF spectrum was absolutely clean. After discussions with the tech and movement to several other plant locations where the symptoms were similar, I began to ask questions about plant bonding and grounding. What I discovered from that discussion and a subsequent plant inspection was that there were no

bonds or grounds in the entire outside plant! *None, zero, nada, nothing.* The entire outside plant, almost all of aerial construction, was acting like a huge long-wire antenna, picking up the entire RF spectrum from around 1 MHz to approximately 200 MHz.

My concern rapidly shifted to plant personnel safety, as we found ourselves in a dangerous situation and I was surprised no safety incidents had ever occured. I explained the situation to the tech and informed him that they had no choice but to embark on an aggressive bonding campaign, which would make the plant safe and prevent induced RF signals into his plant. He then stated he was reluctant to do so, as he rarely if ever experienced damage to plant electronics during electrical storms or other electrical transient events (this also indicated that he was aware of the lack of bonding but had chosen to not comply with NESC code). He was concerned that the introduction of bonds to the electrical utility grounded neutral system would solve one problem but create a new one. I agreed that this was the likely outcome but that we simply had no other choice!

Fast forward to one year later with the approximately 30 mile cable plant properly bonded to the electric utility grounded neutral system. Testing confirmed that all interference was gone, but that the local tech was also correct in that he now experienced occasional plant damage during lightning storms and other electrical transient events. So, one should rightly conclude that the purpose of plant bonding and grounding is based almost entirely upon personnel and public safety requirements, and <u>not</u> for the protection of plant electronics.